74LVQ245

LOW VOLTAGE CMOS OCTAL BUS TRANSCEIVER WITH (3-STATE)

- HIGH SPEED:
  t_{PD} = 5.7 ns (TYP.) at V_{CC} = 3.3 V
- COMPATIBLE WITH TTL OUTPUTS
- LOW POWER DISSIPATION:
  I_{CC} = 5 µA (MAX.) at T_A=25°C
- LOW NOISE:
  V_{OLP} = 0.5V (TYP.) at V_{CC} = 3.3V
- 75Ω TRANSMISSION LINE DRIVING CAPABILITY
- SYMMETRICAL OUTPUT IMPEDANCE:
  $|I_{OH}| = I_{OL}$ = 12mA (MIN) at V_{CC} = 3.0 V
- PCI BUS LEVELS GUARANTEED AT 24 mA
- BALANCED PROPAGATION DELAYS:
  $t_{PLH} \cong t_{PHL}$
- OPERATING VOLTAGE RANGE:
  V_{CC}(OPR) = 2V to 3.6V (1.2V Data Retention)
- PIN AND FUNCTION COMPATIBLE WITH 74 SERIES 245
- IMPROVED LATCH-UP IMMUNITY

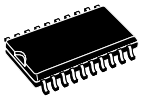

SOP



TSSOP

Table 1: Order Codes

PACKAGE	T & R
SOP	74LVQ245MTR
TSSOP	74LVQ245TTR

DESCRIPTION

The 74LVQ245 is a low voltage CMOS OCTAL BUS TRANSCEIVER (3-STATE fabricated with sub-micron silicon gate and double-layer metal wiring C^2MOS technology. It is ideal for low power and low noise 3.3V applications.

This IC is intended for two-way asynchronous communication between data buses and the direction of data transmission is determined by DIR input. The enable input $\overline{G}$ can be used to disable the device so that the buses are effectively isolated.

All inputs and outputs are equipped with protection circuits against static discharge, giving them 2KV ESD immunity and transient excess voltage.

All floating bus terminals during High Impedance State must be held HIGH or LOW.

Figure 1: Pin Connection And IEC Logic Symbols

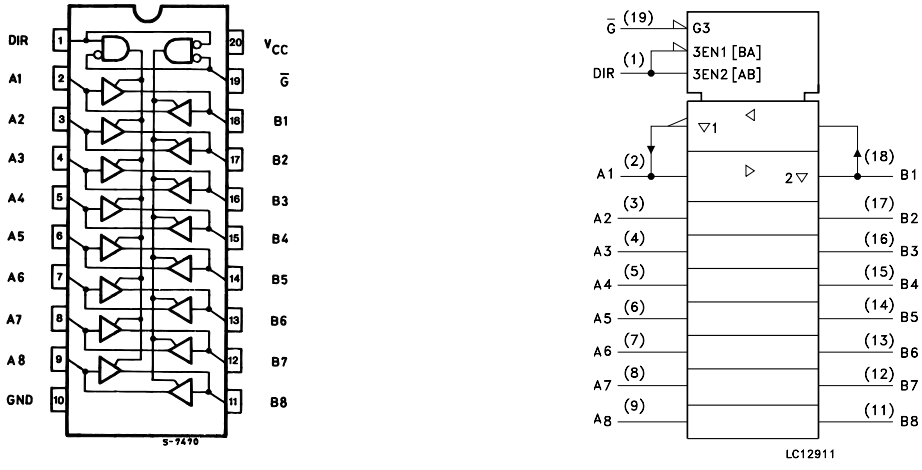

Figure 2: Input Equivalent Circuit

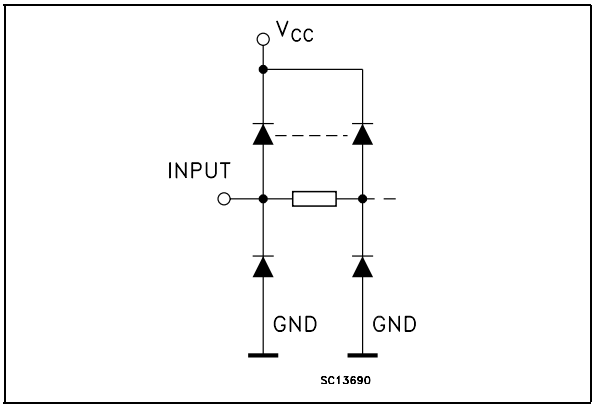

Table 2: Pin Description

PIN N°	SYMBOL	NAME AND FUNCTION
1	DIR	Directional Control
2, 3, 4, 5, 6, 7, 8,9	A1 to A8	Data Inputs/Outputs
18, 17, 16, 15, 14, 13, 12, 11	B1 to B8	Data Inputs/Outputs
19	$\overline{G}$	Output Enable Input
10	GND	Ground (0V)
20	V_{CC}	Positive Supply Voltage

Table 3: Truth Table

INPUTS		FUNCTION		OUTPUT
$\overline{G}$	DIR	A BUS	B BUS	
L	L	OUTPUT	INPUT	A = B
L	H	INPUT	OUTPUT	B = A
H	X	Z	Z	Z

X : Don't Care
Z : High Impedance

Table 4: Absolute Maximum Ratings

Symbol	Parameter	Value	Unit
V_{CC}	Supply Voltage	-0.5 to +7	V
V_I	DC Bus I/O Voltage (DIR, $\overline{G}$)	-0.5 to V_{CC} + 0.5	V
$V_{I/O}$	DC Bus I/O Voltage	-0.5 to V_{CC} + 0.5	V
I_{IK}	DC Input Diode Current	± 20	mA
I_{OK}	DC Output Diode Current	± 20	mA
I_O	DC Output Current	± 50	mA
I_{CC} or I_{GND}	DC V_{CC} or Ground Current	± 400	mA
T_{stg}	Storage Temperature	-65 to +150	°C
T_L	Lead Temperature (10 sec)	300	°C

Absolute Maximum Ratings are those values beyond which damage to the device may occur. Functional operation under these conditions is not implied

Table 5: Recommended Operating Conditions

Symbol	Parameter	Value	Unit
V_{CC}	Supply Voltage (note 1)	2 to 3.6	V
V_I	Input Voltage (DIR, $\overline{G}$)	0 to V_{CC}	V
V_O	DC Bus I/O Voltage	0 to V_{CC}	V
T_{op}	Operating Temperature	-55 to 125	°C
dt/dv	Input Rise and Fall Time V_{CC} = 3.0V (note 2)	0 to 10	ns/V

1) Truth Table guaranteed: 1.2V to 3.6V
2) V_{IN} from 0.8V to 2V

Table 6: DC Specifications

Symbol	Parameter	Test Condition		Value							Unit
		V_{CC} (V)		T_A = 25°C			-40 to 85°C		-55 to 125°C		
				Min.	Typ.	Max.	Min.	Max.	Min.	Max.	
V_{IH}	High Level Input Voltage	3.0 to 3.6		2.0			2.0		2.0		V
V_{IL}	Low Level Input Voltage					0.8		0.8		0.8	V
V_{OH}	High Level Output Voltage	3.0	I_O=-50 µA	2.9	2.99		2.9		2.9		V
			I_O=-12 mA	2.58			2.48		2.48		
			I_O=-24 mA				2.2		2.2		
V_{OL}	Low Level Output Voltage	3.0	I_O=50 µA		0.002	0.1		0.1		0.1	V
			I_O=12 mA		0	0.36		0.44		0.44	
			I_O=24 mA					0.55		0.55	
I_I	Input Leakage Current	3.6	V_I = V_{CC} or GND			± 0.1		± 1		± 1	µA
I_{OZ}	High Impedance Output Leakage Current	3.6	V_I = V_{IH} or V_{IL} V_O = V_{CC} or GND			± 0.3		± 3		± 10	µA
I_{CC}	Quiescent Supply Current	3.6	V_I = V_{CC} or GND			4		40		40	µA
I_{OLD}	Dynamic Output Current (note 1, 2)	3.6	V_{OLD} = 0.8 V max				36		25		mA
I_{OHD}			V_{OHD} = 2 V min				-25		-25		mA

1) Maximum test duration 2ms, one output loaded at time
2) Incident wave switching is guaranteed on transmission lines with impedances as low as 75Ω

Table 7: Dynamic Switching Characteristics

Symbol	Parameter	Test Condition		Value							Unit
		V_{CC} (V)		T_A = 25°C			-40 to 85°C		-55 to 125°C		
				Min.	Typ.	Max.	Min.	Max.	Min.	Max.	
V_{OLP}	Dynamic Low Voltage Quiet Output (note 1, 2)	3.3	C_L = 50 pF		0.5	0.8					V
V_{OLV}				-0.8	-0.5						
V_{IHD}	Dynamic High Voltage Input (note 1, 3)	3.3		2							V
V_{ILD}	Dynamic Low Voltage Input (note 1, 3)	3.3				0.8					V

1) Worst case package.
2) Max number of outputs defined as (n). Data inputs are driven 0V to 3.3V, (n-1) outputs switching and one output at GND.
3) Max number of data inputs (n) switching. (n-1) switching 0V to 3.3V. Inputs under test switching: 3.3V to threshold (V_{ILD}), 0V to threshold (V_{IHD}), f=1MHz.

Table 8: AC Electrical Characteristics (C_L = 50 pF, R_L = 500 Ω, Input $t_r = t_f$ = 3ns)

Symbol	Parameter	Test Condition		Value							Unit
		V_{CC} (V)		T_A = 25°C			-40 to 85°C		-55 to 125°C		
				Min.	Typ.	Max.	Min.	Max.	Min.	Max.	
t_{PLH} t_{PHL}	Propagation Delay Time	2.7			6.7	11.0		13.0		15.0	ns
		3.3(*)			5.7	9.0		10.5		12.0	
t_{PZL} t_{PZH}	Output Enable Time	2.7			9.3	15.0		17.5		20.0	ns
		3.3(*)			7.5	12.0		14.0		16.0	
t_{PLZ} t_{PHZ}	Output Disable Time	2.7			7.5	12.0		14.0		16.0	ns
		3.3(*)			6.6	10.0		11.5		13.0	
t_{OSLH} t_{OSHL}	Output To Output Skew Time (note1, 2)	2.7			0.5	1.0		1.0		1.0	ns
		3.3(*)			0.5	1.0		1.0		1.0	

1) Skew is defined as the absolute value of the difference between the actual propagation delay for any two outputs of the same device switching in the same direction, either HIGH or LOW ($t_{OSLH} = |t_{PLHm} - t_{PLHn}|$, $t_{OSHL} = |t_{PHLm} - t_{PHLn}|$)
2) Parameter guaranteed by design
(*) Voltage range is 3.3V ± 0.3V

Table 9: Capacitive Characteristics

Symbol	Parameter	Test Condition		Value							Unit
		V_{CC} (V)		T_A = 25°C			-40 to 85°C		-55 to 125°C		
				Min.	Typ.	Max.	Min.	Max.	Min.	Max.	
C_{IN}	Input Capacitance	3.3			5						pF
$C_{I/O}$	I/O Capacitance	3.3			10						pF
C_{PD}	Power Dissipation Capacitance (note 1)	3.3	f_{IN} = 10MHz		20						pF

1) C_{PD} is defined as the value of the IC's internal equivalent capacitance which is calculated from the operating current consumption without load. (Refer to Test Circuit). Average operating current can be obtained by the following equation. $I_{CC(opr)} = C_{PD} \times V_{CC} \times f_{IN} + I_{CC}/8$ (per circuit)

Figure 3: Test Circuit

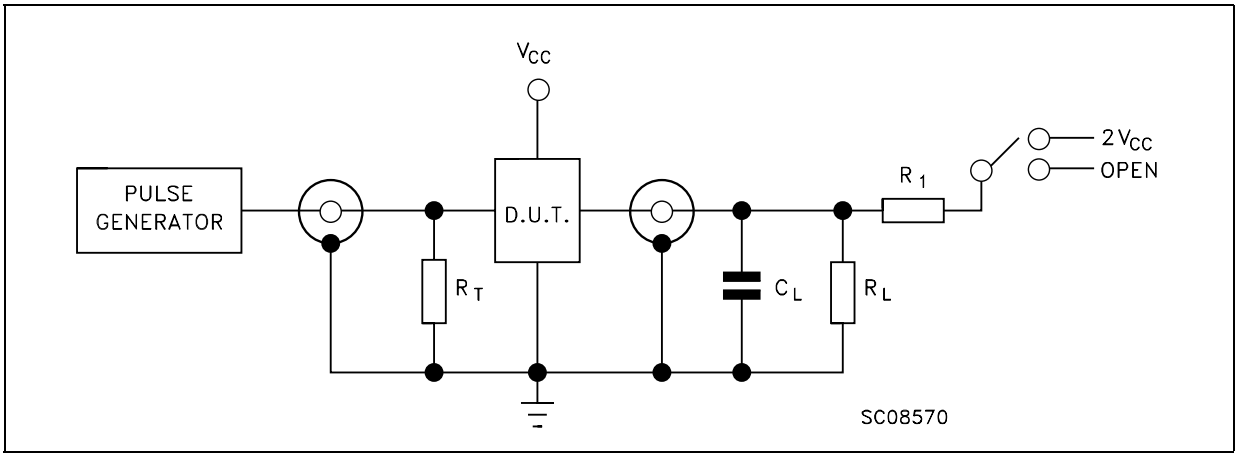

TEST	SWITCH
t_{PLH}, t_{PHL}	Open
t_{PZL}, t_{PLZ}	$2V_{CC}$
t_{PZH}, t_{PHZ}	Open

C_L = 50pF or equivalent (includes jig and probe capacitance)
R_L = R_1 = 500Ω or equivalent
R_T = Z_{OUT} of pulse generator (typically 50Ω)

Figure 4: Waveform - Propagation Delays (f=1MHz; 50% duty cycle)

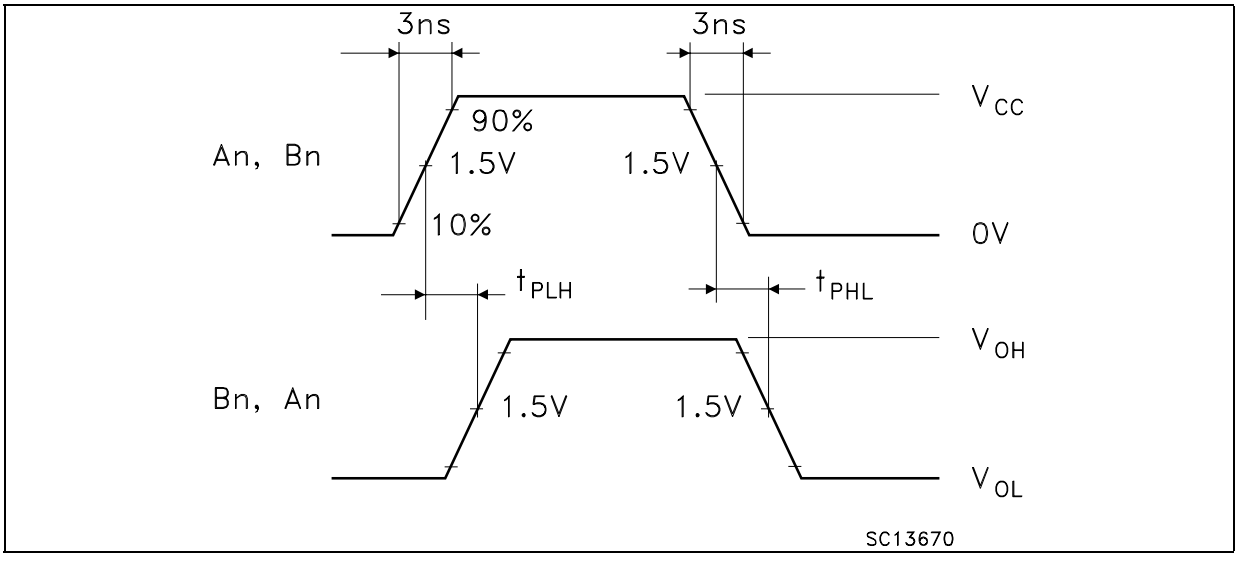

Figure 5: Waveform - Output Enable And Disable Time (f=1MHz; 50% duty cycle)

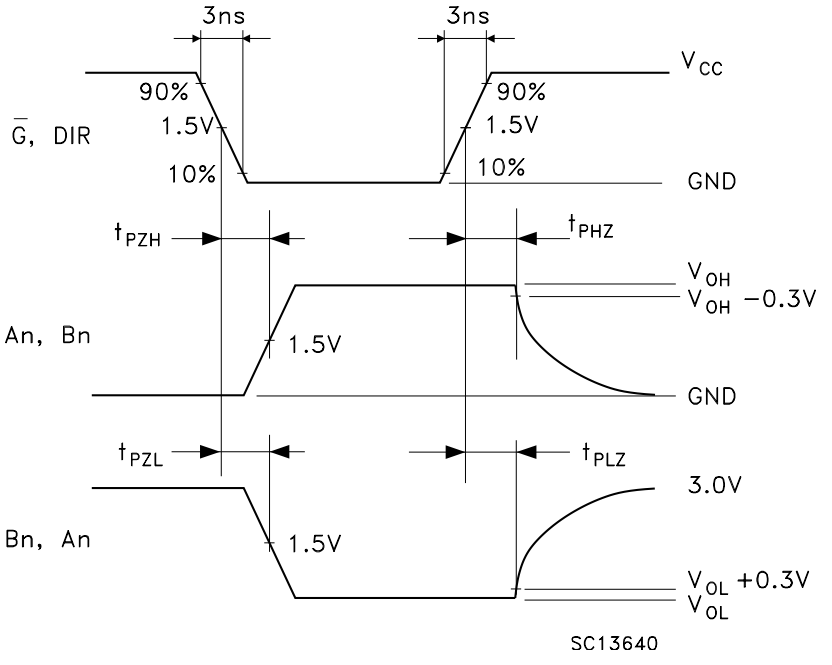

SO-20 MECHANICAL DATA

DIM.	mm.			inch		
	MIN.	TYP	MAX.	MIN.	TYP.	MAX.
A	2.35		2.65	0.093		0.104
A1	0.1		0.30	0.004		0.012
B	0.33		0.51	0.013		0.020
C	0.23		0.32	0.009		0.013
D	12.60		13.00	0.496		0.512
E	7.4		7.6	0.291		0.299
e		1.27			0.050	
H	10.00		10.65	0.394		0.419
h	0.25		0.75	0.010		0.030
L	0.4		1.27	0.016		0.050
k	0°		8°	0°		8°
ddd			0.100			0.004

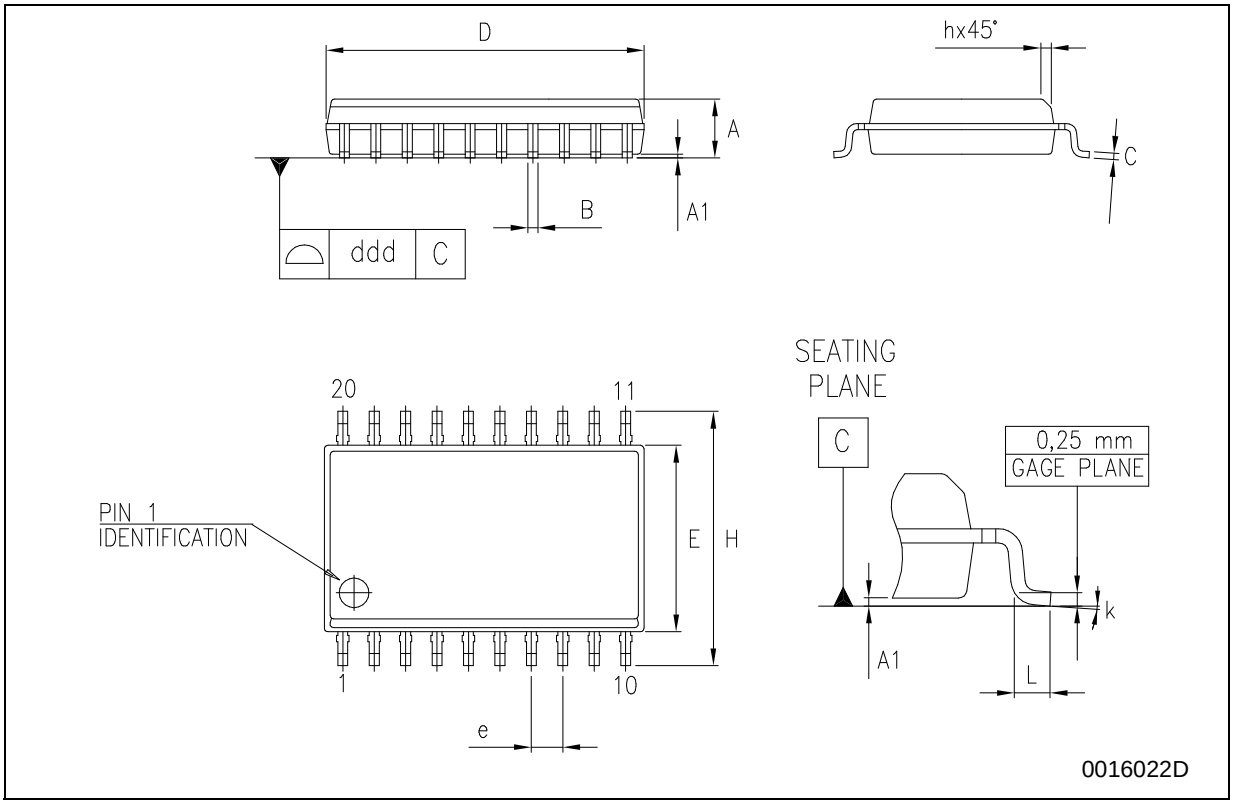

TSSOP20 MECHANICAL DATA

DIM.	mm.			inch		
	MIN.	TYP	MAX.	MIN.	TYP.	MAX.
A			1.2			0.047
A1	0.05		0.15	0.002	0.004	0.006
A2	0.8	1	1.05	0.031	0.039	0.041
b	0.19		0.30	0.007		0.012
c	0.09		0.20	0.004		0.0079
D	6.4	6.5	6.6	0.252	0.256	0.260
E	6.2	6.4	6.6	0.244	0.252	0.260
E1	4.3	4.4	4.48	0.169	0.173	0.176
e		0.65 BSC			0.0256 BSC	
K	0°		8°	0°		8°
L	0.45	0.60	0.75	0.018	0.024	0.030

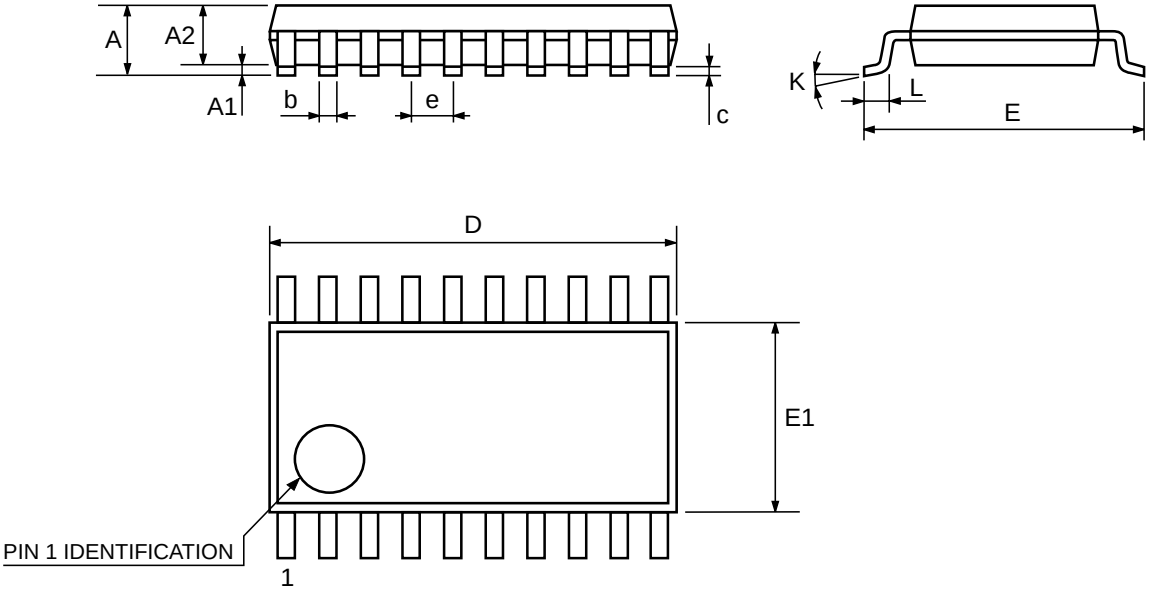

Tape & Reel SO-20 MECHANICAL DATA

DIM.	mm.			inch		
	MIN.	TYP	MAX.	MIN.	TYP.	MAX.
A			330			12.992
C	12.8		13.2	0.504		0.519
D	20.2			0.795		
N	60			2.362		
T			30.4			1.197
Ao	10.8		11	0.425		0.433
Bo	13.2		13.4	0.520		0.528
Ko	3.1		3.3	0.122		0.130
Po	3.9		4.1	0.153		0.161
P	11.9		12.1	0.468		0.476

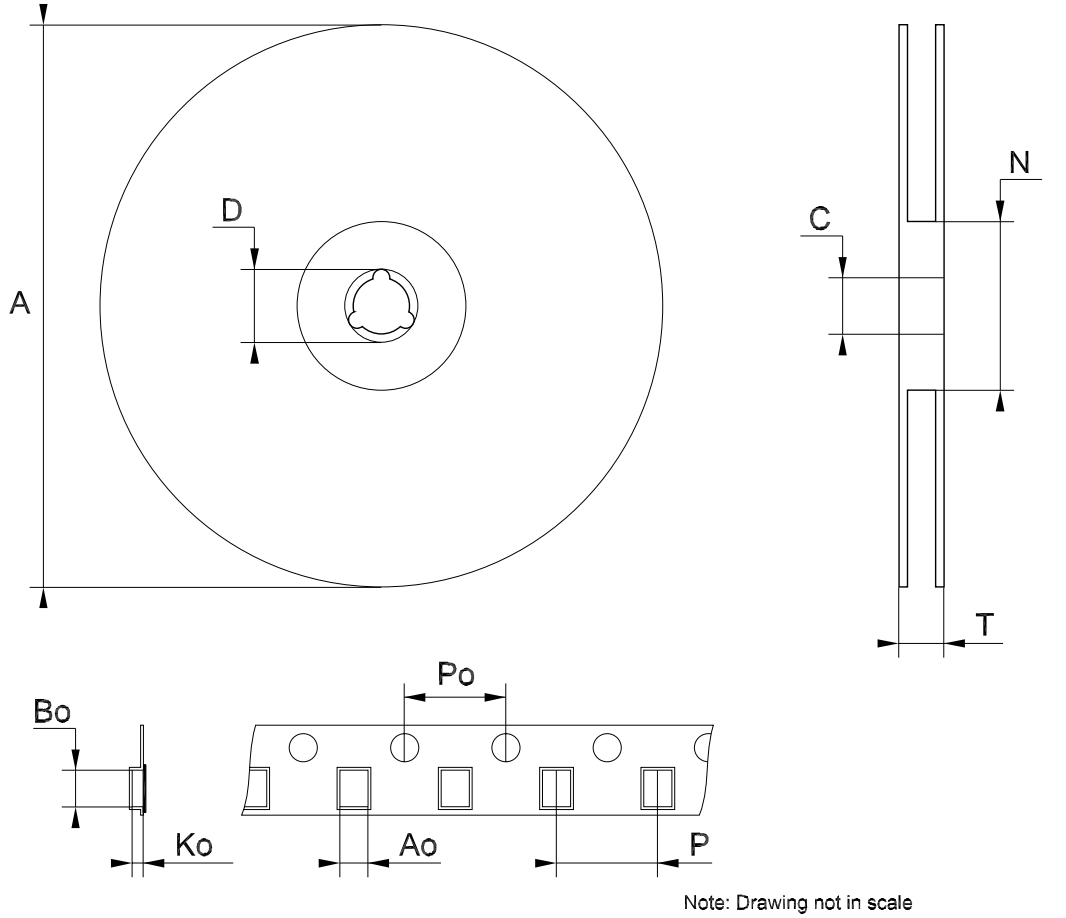

Note: Drawing not in scale

Tape & Reel TSSOP20 MECHANICAL DATA

DIM.	mm.			inch		
	MIN.	TYP	MAX.	MIN.	TYP.	MAX.
A			330			12.992
C	12.8		13.2	0.504		0.519
D	20.2			0.795		
N	60			2.362		
T			22.4			0.882
Ao	6.8		7	0.268		0.276
Bo	6.9		7.1	0.272		0.280
Ko	1.7		1.9	0.067		0.075
Po	3.9		4.1	0.153		0.161
P	11.9		12.1	0.468		0.476

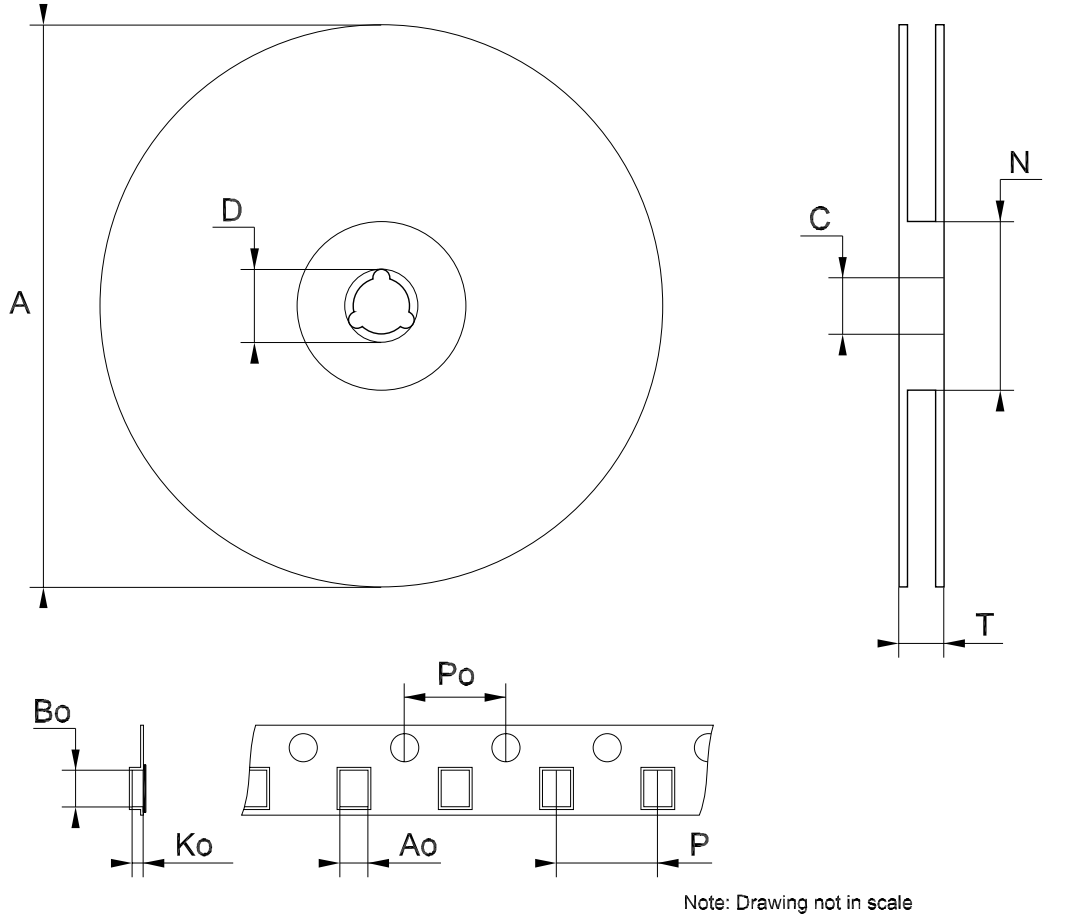

Note: Drawing not in scale

Table 10: Revision History

Date	Revision	Description of Changes
29-Jul-2004	5	Ordering Codes Revision - pag. 1.

Information furnished is believed to be accurate and reliable. However, STMicroelectronics assumes no responsibility for the consequences of use of such information nor for any infringement of patents or other rights of third parties which may result from its use. No license is granted by implication or otherwise under any patent or patent rights of STMicroelectronics. Specifications mentioned in this publication are subject to change without notice. This publication supersedes and replaces all information previously supplied. STMicroelectronics products are not authorized for use as critical components in life support devices or systems without express written approval of STMicroelectronics.

The ST logo is a registered trademark of STMicroelectronics

All other names are the property of their respective owners

© 2004 STMicroelectronics - All Rights Reserved

STMicroelectronics group of companies

Australia - Belgium - Brazil - Canada - China - Czech Republic - Finland - France - Germany - Hong Kong - India - Israel - Italy - Japan - Malaysia - Malta - Morocco - Singapore - Spain - Sweden - Switzerland - United Kingdom - United States of America

www.st.com